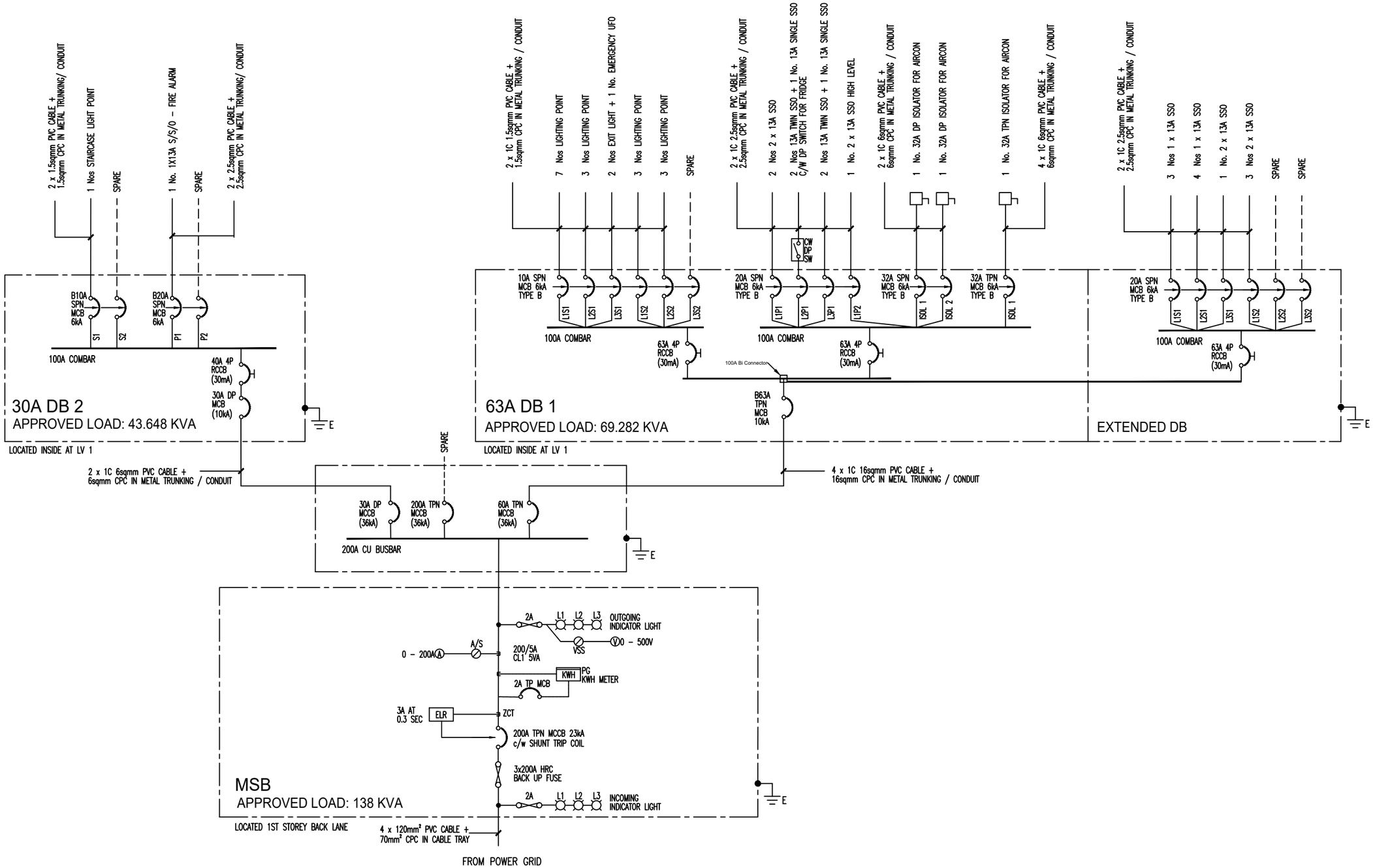

CLIENT / ADDRESS :	MAIN CONTRACTOR :	ELECTRICAL CONTRACTOR :	DRAWING TITLE :	LEW :	CHECKED :	DATE :
IYA WELLNESS GROUP PTE LTD 55 DUXTON ROAD SINGAPORE 089519			SINGLE LINE DIAGRAM (SLD)	ABDUL JABBAR EMA Licence No. : 8/35550	Ryan	18 JAN 2026
					DRAWING NO. : I2R-IYA-DUX-SLD	REV : 0